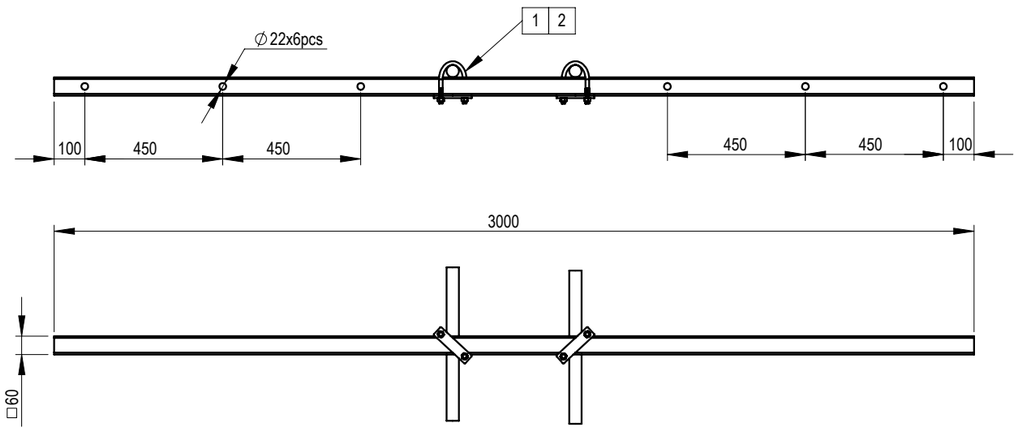

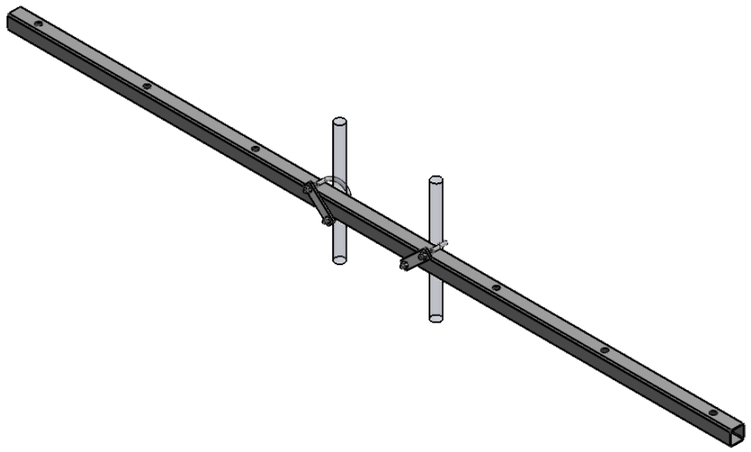

Pos.	Type	DIN/ISO	Material	Pcs.
1	U-Bracket-94	3570	HDG	2
2	M12 Nut	934	HDG	4

moramast

This drawing is an intellectual property of © Tecnopali North Europe. Copying and transferring is forbidden without company's permission. Moramast has the permission from Tecnopali to transmiss the drawing to our template.

Material: Varmförzinkat stål	Varmförzinkad: SS-EN 1461	Ritad av: MD	Datum: 2025-02-19	Skala: 1:10
Benämning: MMHM STRÅLKASTARBALK L3000 SEKTION		Godk. av: VA	Godk./Datum: 2025-02-19	Format: A3
Ritningsnr: **ST3788**	Vikt: 14 kg	Rev: A	Status: Released	Blad: 1/1