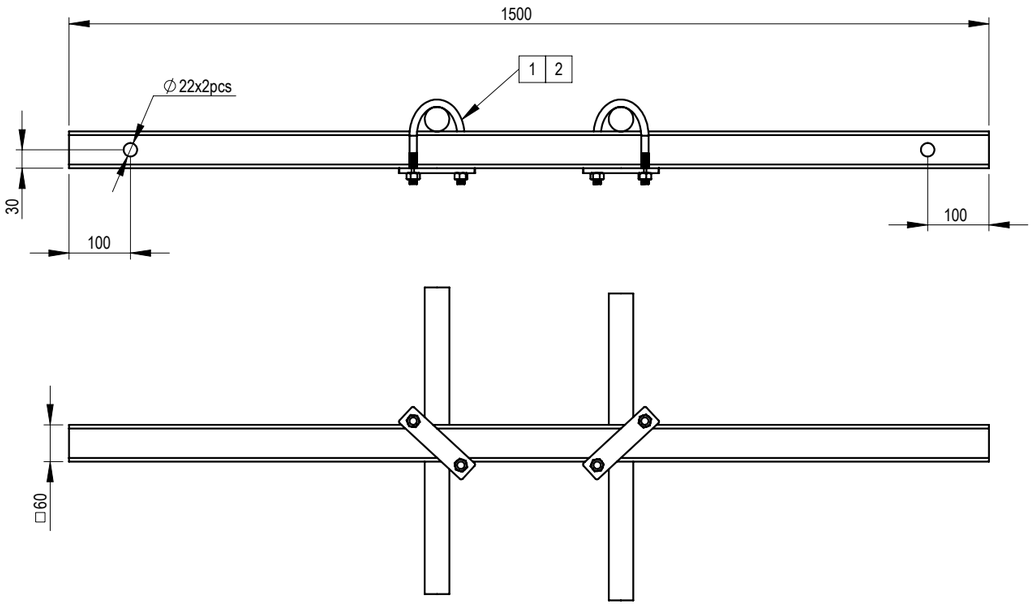


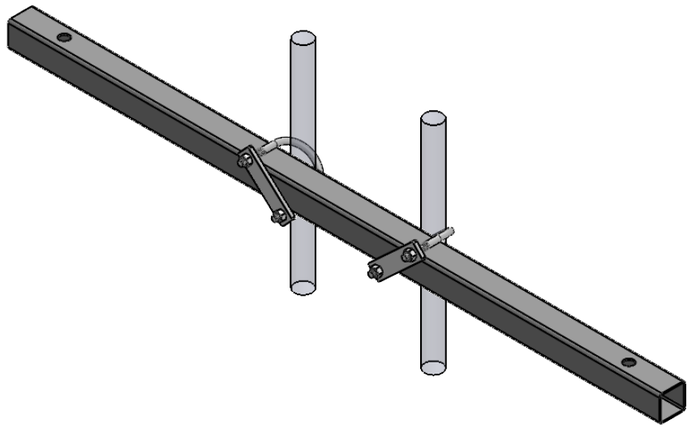

| Pos. | Type | DIN/ISO | Material | Pcs. |
|---|---|---|---|---|
| 1 | U-Bracket-64 | 3570 | HDG | 2 |
| 2 | M12 Nut | 934 | HDG | 4 |

This drawing is an intellectual property of © Tecnopali North Europe. Copying and transferring is forbidden without company's permission. Moramast has the permission from Tecnopali to transmiss the drawing to our template.

moramast

| | | | | |
|---|---|---|---|---|
| Material: Varmförzinkat stål | Varmförzinkad: SS-EN 1461 | Ritad av: MD | Datum: 2024-11-05 | Skala: 1:10 |
| Benämning: MMHM Strålkastarbalk L1500 250-300 | | Godk. av: VA | Godk./Datum: 2024-11-05 | Format: A3 |
| Ritningsnr: **ST3715** | Vikt: 8,8 kg | Rev: A | Status: Released | Blad: 1/1 |