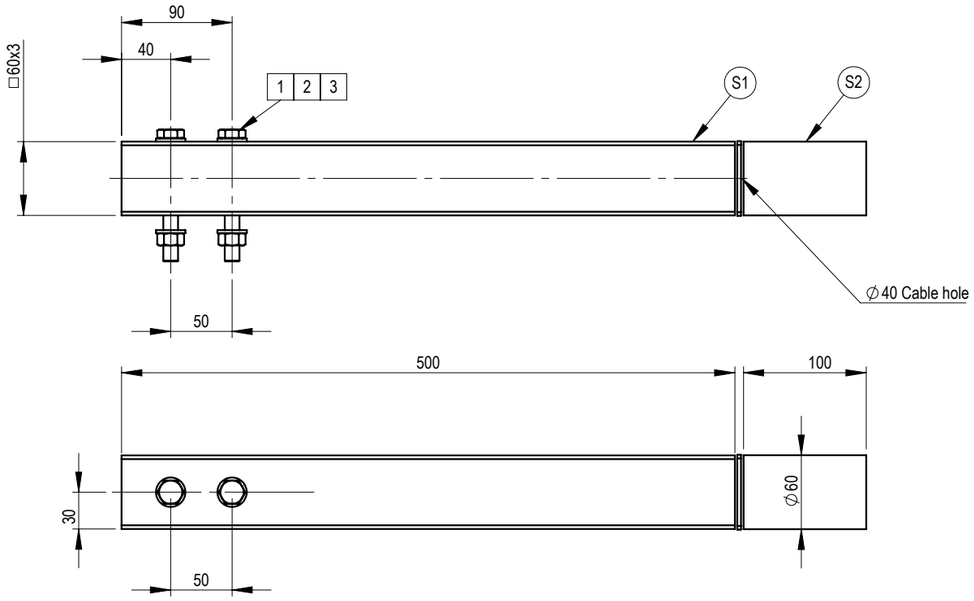

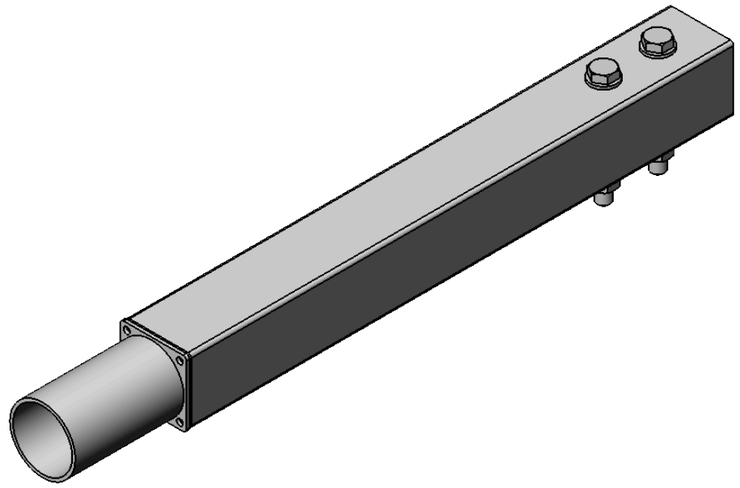

Pos.	Type	DIN/ISO	Material	Pcs.
1	M12x100	933	HDG	2
2	M12 washer	125	HDG	4
3	M12 Nut	934	HDG	2

Section	∅ / □ / W	Material	Thickness	Pcs.	L / WxL
S1	60x60	S235	3	1	500
S2	60.3	S235	2.9	1	100

moramast

This drawing is an intellectual property of © Tecnopali North Europe. Copying and transferring is forbidden without company's permission. Moramast has the permission from Tecnopali to transmiss the drawing to our template.

Material: Varmförzinkat stål	Varmförzinkad: SS-EN 1461	Ritad av: MD	Datum: 2024-10-01	Skala: 1:5
Benämning: Strålkastararm 1A L500		Godk. av: VA	Godk./Datum: 2024-10-01	Format: A3
Ritningsnr: **ST3681**	Vikt: 3 kg	Rev: A	Status: Released	Blad: 1/1