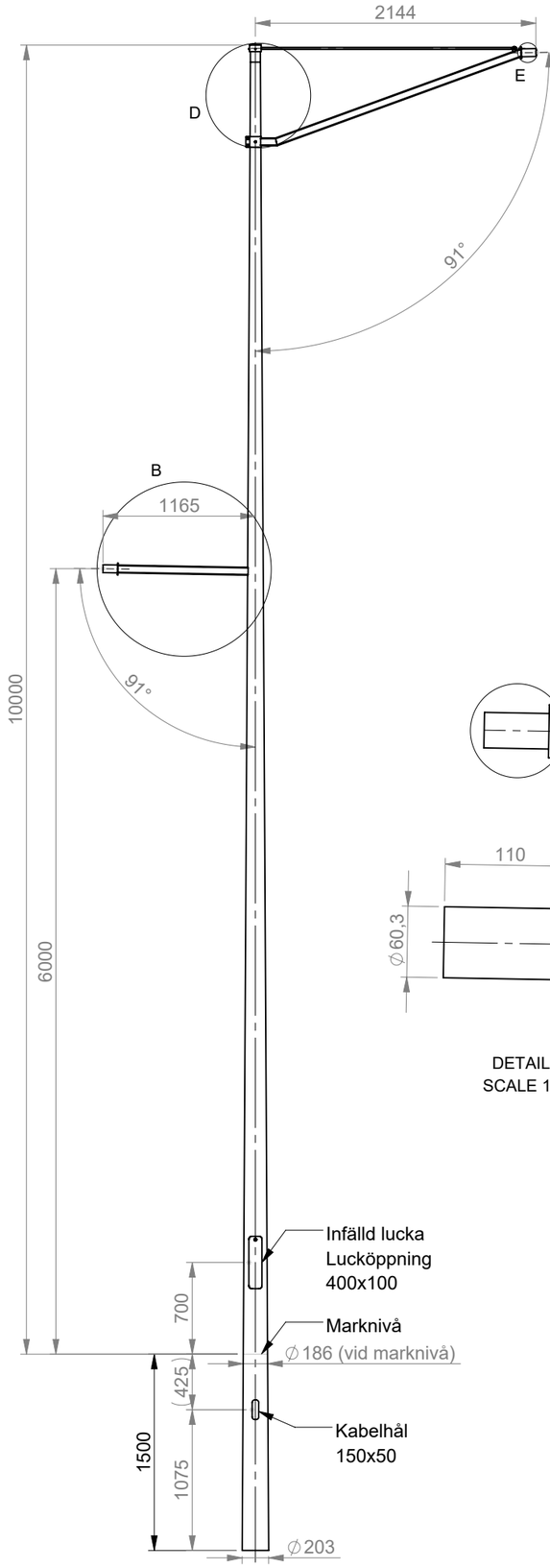

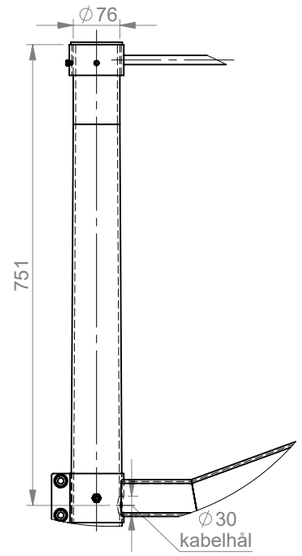

DETAIL D
SCALE 1 : 10

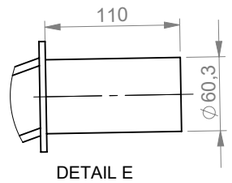

DETAIL E
SCALE 1 : 5

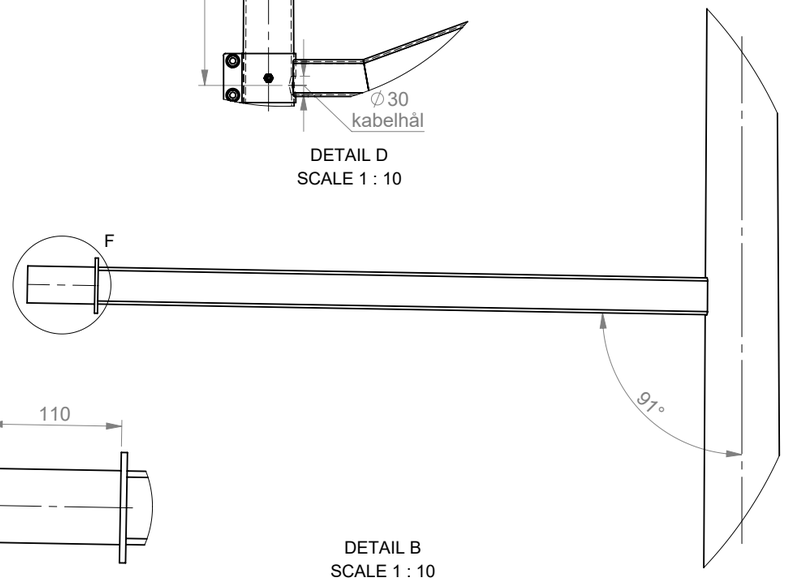

DETAIL B
SCALE 1 : 10

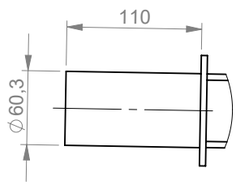

DETAIL F
SCALE 1 : 5

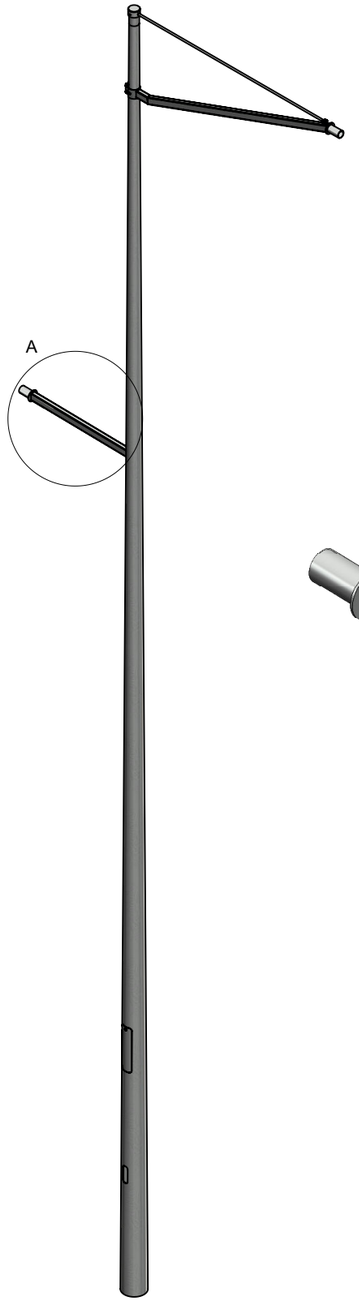

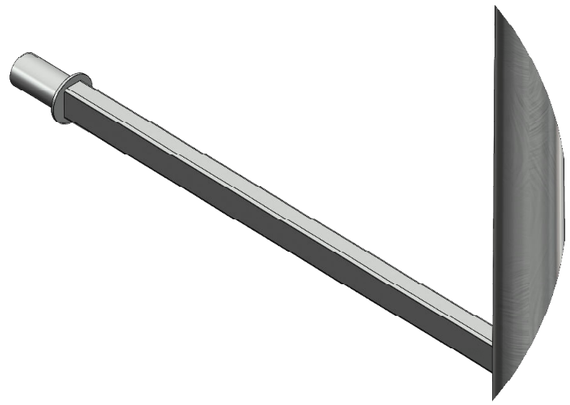

DETAIL A
SCALE 1 : 10

Konicitet 11mm/m

Skarpa kanter brutna

Ritad av:	Datum:	Godk. av:	Godk./Datum:	Material:	Status:	Vikt:	Tolerans:	Skala:
MM	2020-03-24	SA	2020-03-26		Released	169.93 kg	ISO 2768-1 c	1:45

moramast

This drawing and all opppurtenant matter shall remain the company Mora Mast AB property. They shall not without our written permission, either in their original state or with any changes be copied or manifolded, shown to or in any other way communicated to or handed over to any part.

Benämning:	Format:
KLS 100-60/76-186 FR E21.5-11.5 Ymera	A3

Ritningsnr:	Rev:	Blad:
SS800796	**A**	1/1