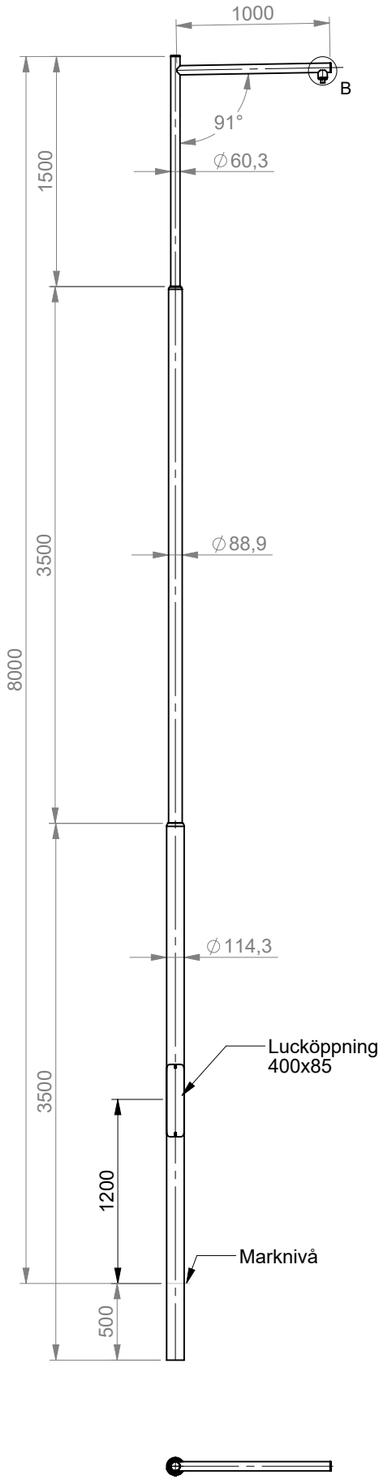

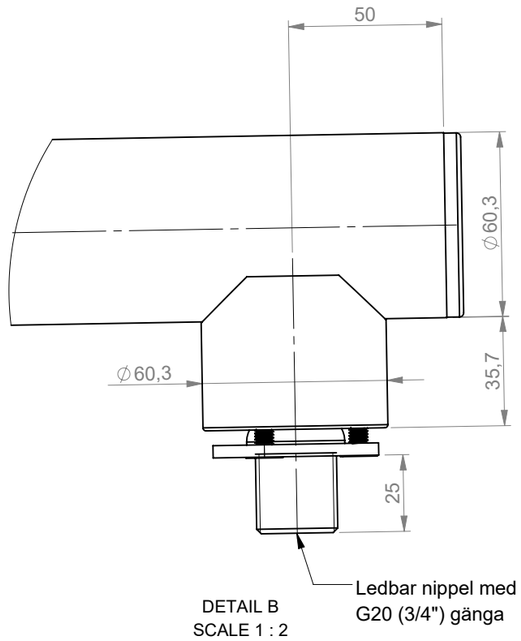

DETAIL B
SCALE 1 : 2

DETAIL C
SCALE 1 : 10

DETAIL D
SCALE 1 : 3

Skarpa kanter brutna

Ritad av:	Datum:	Godk. av:	Godk./Datum:	Material:	Status:	Vikt:	Tolerans:	Skala:
EN	2020-12-01	SA	2021-05-25		Released	72.67 kg	ISO 2768-1 c	1:40

moramast

This drawing and all opppurtenant matter shall remain the company Mora Mast AB property. They shall not without our written permission, either in their original state or with any changes be copied or manifolded, shown to or in any other way communicated to or handed over to any part.

Benämning:	Format:
MM80/60-114 E10 N3/4	A3

Ritningsnr:	Rev:	Blad:
SS200497	**A**	1/1